Cisal
TEL. (+39) 0322 918111
MAIL. cisal@cisal.it

Single lever bath mixer ARCANA EMPRESS_EM000130



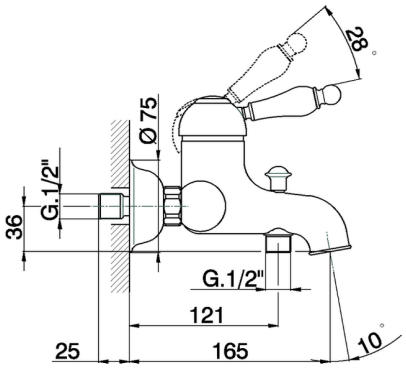

MODEL **EM000130**

Single lever bath mixer,without shower set,1/2" M flexible connection

AVAILABLE FINISHINGS

21 21 Chrome

24 24 Gold

26 26 Old Copper

27 27 Old Bronze

2A 2A Satin Brushed Nickel

74 74 Chrome/Gold

CHARACTERISTICS

Cartridge Spare Parts **ZZ92909000**

43 mm Cartridge

© 2021 Cisal. Via Pietro Durio 160 - 28010 - Alzo (NO) - Italia
Mail: cisal@cisal.it, Telefono: (+39) 0322 918111, P.Iva IT02422810032.