Cisal
TEL. (+39) 0322 918111
MAIL. cisal@cisal.it

Exposed part for concealed S.L. shower valve BARCELONA_BV003000

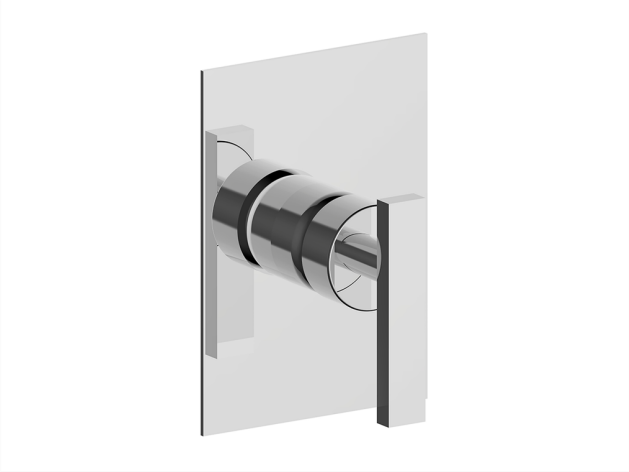

MODEL **BV003000**

Exposed part for concealed S.L.shower valve,without concealed part,for item ZA005300-ZA005301

AVAILABLE FINISHINGS

21 21 Chrome

2A 2A Satin Brushed Nickel

40 40 Matt Black

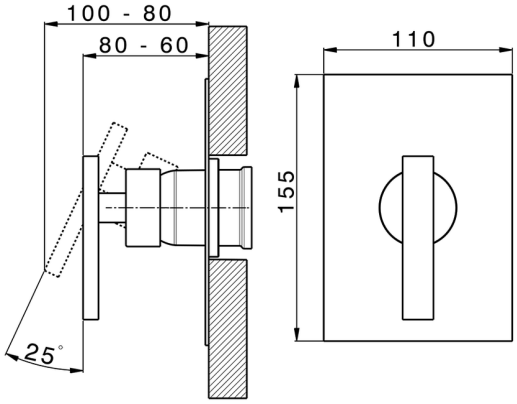

CHARACTERISTICS

Installation	**Concealed**
Required concealed parts	**ZA005301**
	ZA005300

© 2021 Cisal. Via Pietro Durio 160 - 28010 - Alzo (NO) - Italia
Mail: cisal@cisal.it, Telefono: (+39) 0322 918111, P.Iva IT02422810032.