Cisal
TEL. (+39) 0322 918111
MAIL. cisal@cisal.it

Deck mounted 2-holes single lever bath mixer ARCANA EMPRESS_EM001290



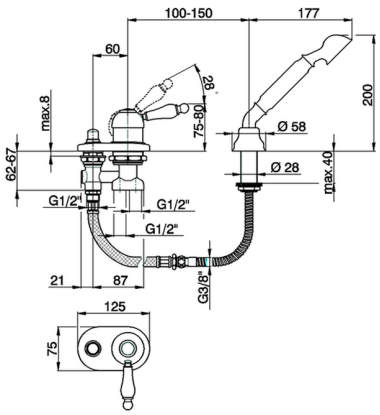

MODEL **EM001290**

Deck mounted 2-holes single lever bath mixer,automatic diverter,Toscana one spray handshower,175 cm Brass flexible hose

AVAILABLE FINISHINGS

21 21 Chrome

24 24 Gold

26 26 Old Copper

27 27 Old Bronze

2A 2A Satin Brushed Nickel

74 74 Chrome/Gold

CHARACTERISTICS

Cartridge Spare Parts **ZZ92909000**

43 mm Cartridge

© 2021 Cisal. Via Pietro Durio 160 - 28010 - Alzo (NO) - Italia
Mail: cisal@cisal.it, Telefono: (+39) 0322 918111, P.Iva IT02422810032.