Cisal
TEL. (+39) 0322 918111
MAIL. cisal@cisal.it

Concealed thermostatic shower mixer, 2-outlets CONCEALED_ZA019340

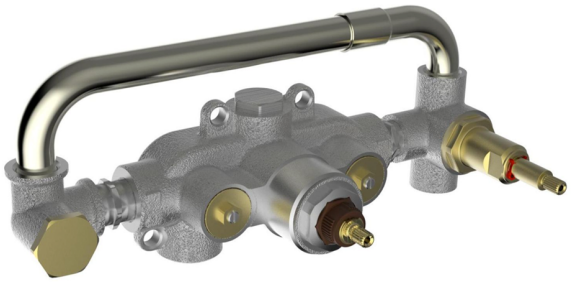

MODEL **ZA019340**

Concealed thermostatic shower mixer, 2-outlets,without trim kit

AVAILABLE FINISHINGS

04 04 Without finishing

CHARACTERISTICS

Concealed	**1**
Cartridge Spare Parts	**24.04A.PP**

8x20 Plus P Thermostatic Valve

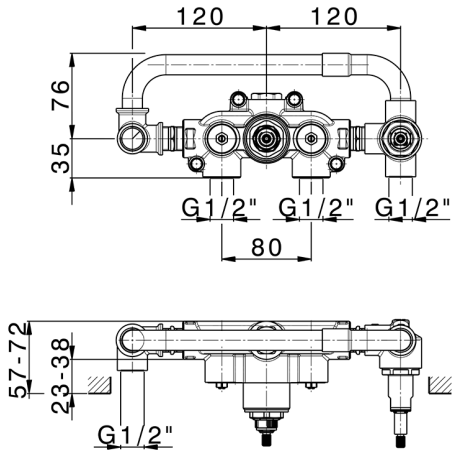

Thermostatic

The Cisal thermostatic is your personal water manager, helping you to handle, control and save water and energy.

2026-11-23

© 2021 Cisal. Via Pietro Durio 160 - 28010 - Alzo (NO) - Italia
Mail: cisal@cisal.it, Telefono: (+39) 0322 918111, P.Iva IT02422810032.