Cisal
TEL. (+39) 0322 918111
MAIL. cisal@cisal.it

Exposed part for Single Lever One Box Valve LESS MINIMAL_LM0BM010



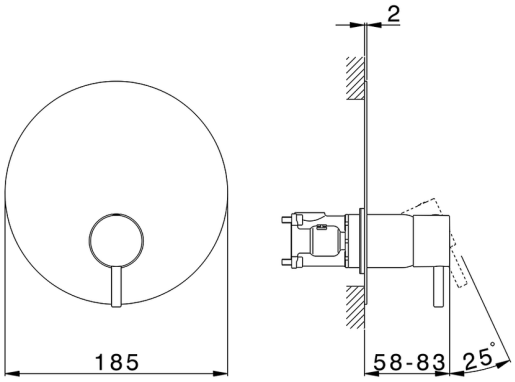

MODEL **LM0BM010**

Exposed part for Single Lever One Box Valve,1 Outlet,Minimum depth of installation: 67 mm,without concealed part,for items ZA00B030-ZA00B031

AVAILABLE FINISHINGS

21 21 Chrome

2F 2F Brushed Nickel

40 40 Matt Black

4Q 4Q Matt White

CHARACTERISTICS

Cartridge Spare Parts	**ZZ97179000**
35 mm Cartridge	
Installation	**Concealed**
Required concealed parts	**ZA00B031**
	ZA00B030

© 2021 Cisal. Via Pietro Durio 160 - 28010 - Alzo (NO) - Italia
Mail: cisal@cisal.it, Telefono: (+39) 0322 918111, P.Iva IT02422810032.

Cisal
TEL. (+39) 0322 918111
MAIL. cisal@cisal.it

One Box Universal Concealed Part ONE BOX_ZA00B030



MODEL **ZA00B030**

One Box Universal Concealed Part,for 1,2 or 3 outlet thermostatic or single lever,without trim kit,without noise reducers,with sealing gasket

AVAILABLE FINISHINGS

04 04 Without finishing

CHARACTERISTICS

Concealed	**1**

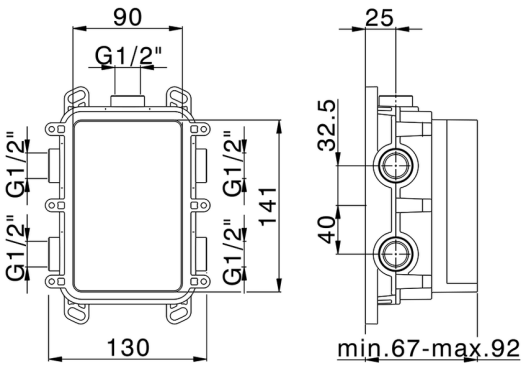

Thermostatic

The Cisal thermostatic is your personal water manager, helping you to handle, control and save water and energy.

2026-03-10

© 2021 Cisal. Via Pietro Durio 160 - 28010 - Alzo (NO) - Italia
Mail: cisal@cisal.it, Telefono: (+39) 0322 918111, P.Iva IT02422810032.