Cisal
TEL. (+39) 0322 918111
MAIL. cisal@cisal.it

# Exposed part for concealed washbasin mixer WAVE_WA013510



MODEL **WA013510**

Exposed part for concealed washbasin mixer,without concealed part,for item ZA033511

## AVAILABLE FINISHINGS

**21** 21 Chrome

**2F** 2F Brushed Nickel

**2Q** 2Q Black Titanium

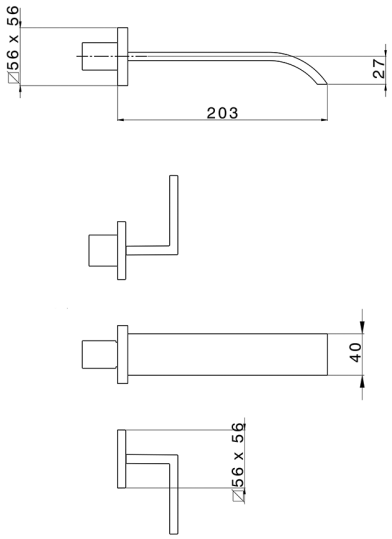


## CHARACTERISTICS

| | |
|---|---|
| Installation | **Concealed** |
| Required concealed parts | **ZA033511** |

© 2021 Cisal. Via Pietro Durio 160 - 28010 - Alzo (NO) - Italia
Mail: cisal@cisal.it, Telefono: (+39) 0322 918111, P.Iva IT02422810032.

Cisal
TEL. (+39) 0322 918111
MAIL. cisal@cisal.it

# Concealed washbasin mixer CONCEALED_ZA033511



MODEL **ZA033511**

Concealed washbasin mixer,right headvalve - left headvalve

## AVAILABLE FINISHINGS

**04** 04 Without finishing

## CHARACTERISTICS

| | |
|---|---|
| Concealed | **1** |

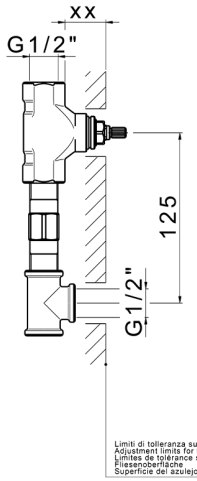


| Serie's code | Size XX |
|---|---|
| CX 1351 | 20-35 |
| CF 1351 | 20-35 |
| CX 0331 | 20-35 |
| CF 0331 | 20-35 |
| CX 0200 | 20-35 |
| CF 0200 | 20-35 |
| BA 1351 | 20-35 |
| GS 1351 | 20-35 |
| GL 1351 | 20-35 |
| MN 1351 | 20-35 |
| LN 1351 | 20-35 |
| LV 1351 | 33-48 |
| LY 1351 | 33-48 |
| CU 1351 | 33-48 |
| SM 1351 | 30-45 |
| AA 1351 | 10-30 |
| AC 1351 | 10-30 |
| AR 1351 | 15-25 |
| PZ 1351 | 10-30 |
| RG 1351 | 10-30 |
| TS 1351 | 10-30 |
| VT 1351 | 10-30 |
| CS 1351 | 10-30 |
| WA 1351 | 45-68 |
| X1 1351 | 33-45 |
| X2 1351 | 33-45 |
| X3 1351 | 33-45 |
| X4 1351 | 33-45 |
| X5 1351 | 33-45 |
| RI 1351 | 20-35 |
| RM 1351 | 20-35 |

2026-03-03

© 2021 Cisal. Via Pietro Durio 160 - 28010 - Alzo (NO) - Italia
Mail: cisal@cisal.it, Telefono: (+39) 0322 918111, P.Iva IT02422810032.