Cisal
TEL. (+39) 0322 918111
MAIL. cisal@cisal.it

Exposed part for single basin on the floor LINEAVIVA_LV014510

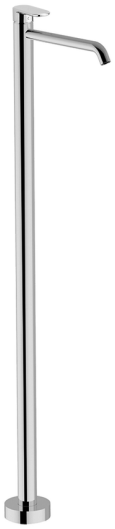

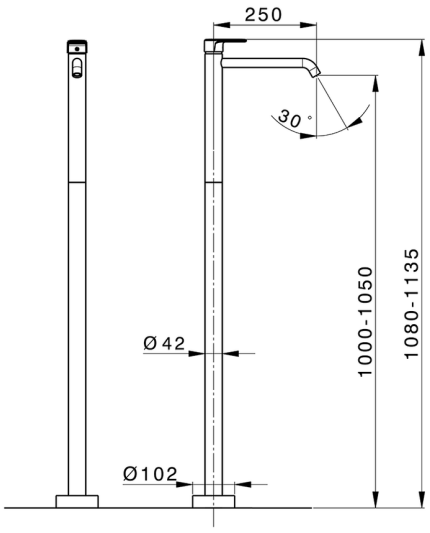

MODEL **LV014510**

Exposed part for single basin on the floor,without concealed part,for item ZA004510

AVAILABLE FINISHINGS

	21	21 Chrome
	2B	2B Polished Nickel
	2F	2F Brushed Nickel
	40	40 Matt Black
	4Q	4Q Matt White

CHARACTERISTICS

Cartridge Spare Parts	**ZZ99672000**
35 mm Cartridge	
Installation	**Concealed**
Required concealed parts	**ZA004510**

EcoStop

EcoStop feature limits water flow to approximately 50% of maximum output with one point of resistance on setting. Push slightly past the middle stop only when full water output is required. This will save water up to 50%.

© 2021 Cisal. Via Pietro Durio 160 - 28010 - Alzo (NO) - Italia
Mail: cisal@cisal.it, Telefono: (+39) 0322 918111, P.Iva IT02422810032.

Cisal
TEL. (+39) 0322 918111
MAIL. cisal@cisal.it

Concealed part single lever free-standing CONCEALED_ZA004510



MODEL **ZA004510**

Concealed part single lever free-standing

AVAILABLE FINISHINGS

04 04 Without finishing

CHARACTERISTICS

Concealed	**1**

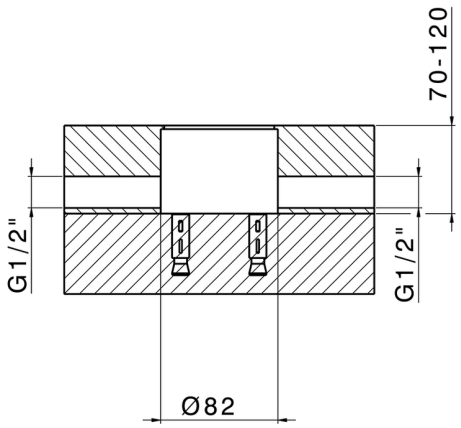

2026-02-17

© 2021 Cisal. Via Pietro Durio 160 - 28010 - Alzo (NO) - Italia
Mail: cisal@cisal.it, Telefono: (+39) 0322 918111, P.Iva IT02422810032.