Cisal
TEL. (+39) 0322 918111
MAIL. cisal@cisal.it

Exposed part for con.thermo.shower valve, 3-outlet SMOOTH X32_X3018200

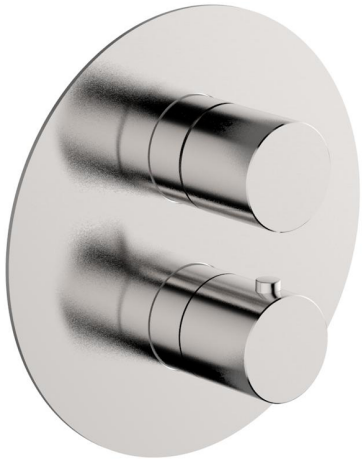

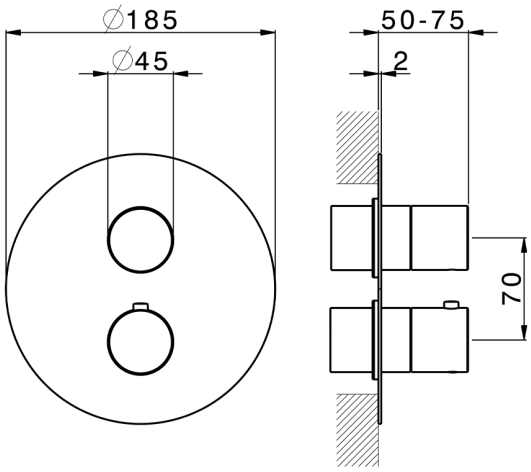

MODEL **X3018200**

Exposed part for con.thermo.shower valve, 3-outlet,with 3 outlet deviastop,without concealed part,for item ZA018201,with smooth handles - Inox AISI 316L

AVAILABLE FINISHINGS

	**5H**	5H Dark Brass Brushed
	**5L**	5L Brushed Black Titanium
	**5N**	5N Brushed Rose Gold
	**D1**	D1 Brushed Inox

CHARACTERISTICS

Installation	**Concealed**
Required concealed parts	**ZA018201**

Thermostatic

The Cisal thermostatic is your personal water manager, helping you to handle, control and save water and energy.

© 2021 Cisal. Via Pietro Durio 160 - 28010 - Alzo (NO) - Italia
Mail: cisal@cisal.it, Telefono: (+39) 0322 918111, P.Iva IT02422810032.

Cisal
TEL. (+39) 0322 918111
MAIL. cisal@cisal.it

Exposed part for con.thermo.shower valve, 3-outlet SMOOTH X32_X3018200

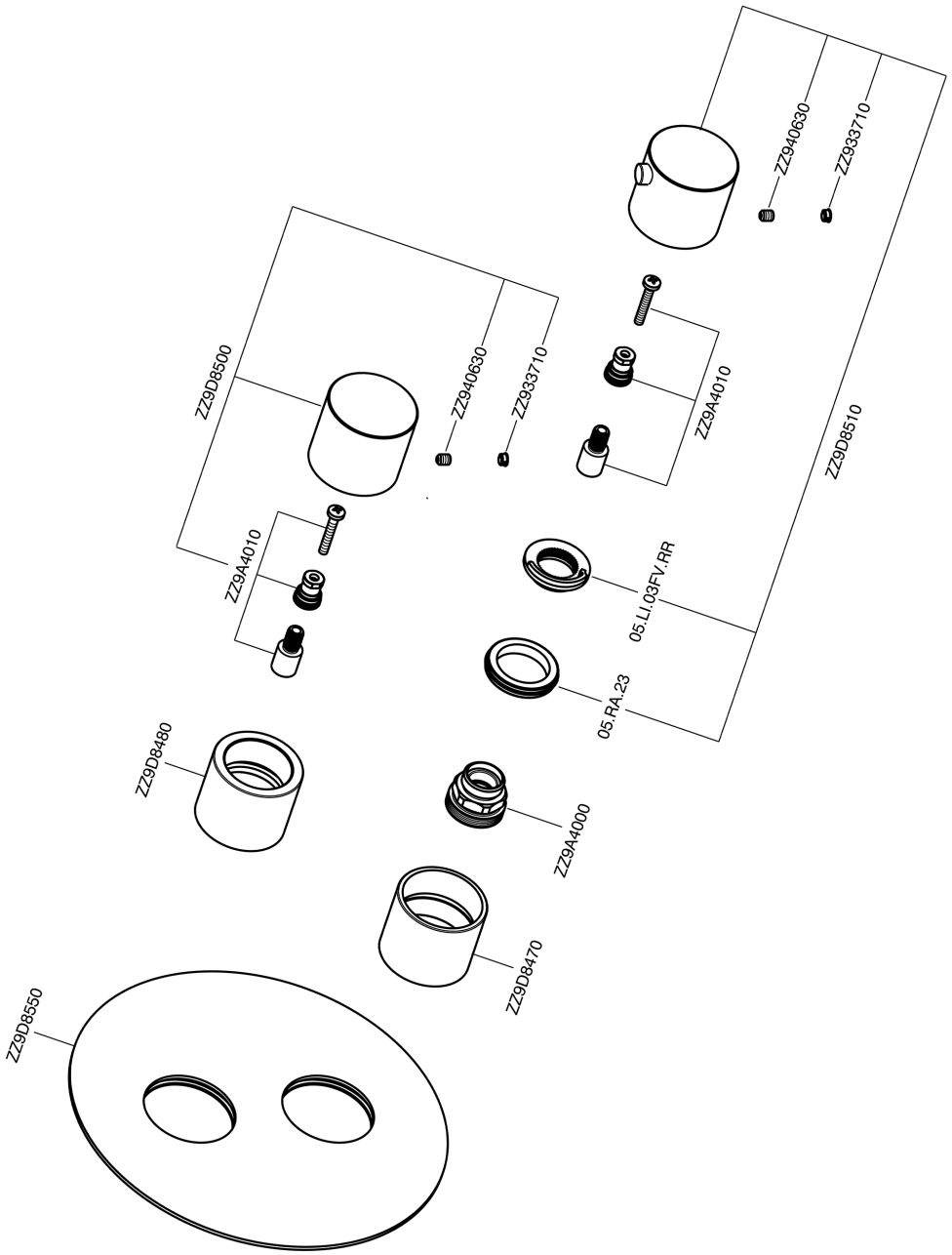

X3018200 https://en.cisal.it/exposed-part-for-con-thermo-shower-valve-3-outlet-smooth-x32-x3018200

© 2021 Cisal. Via Pietro Durio 160 - 28010 - Alzo (NO) - Italia
Mail: cisal@cisal.it, Telefono: (+39) 0322 918111, P.Iva IT02422810032.