Cisal
TEL. (+39) 0322 918111
MAIL. cisal@cisal.it

Exposed part for single lever washbasin valve LESS MINIMAL_LM005518

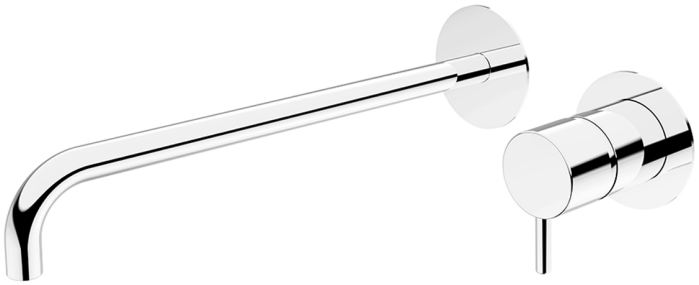

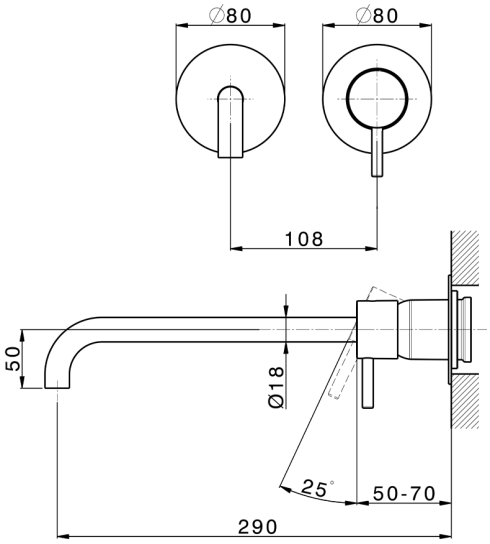

MODEL **LM005518**

Exposed part for single lever washbasin valve,without concealed part,for item Easy-Box ZA002450-ZA025510

AVAILABLE FINISHINGS

	21	21 Chrome
	2F	2F Brushed Nickel
	40	40 Matt Black
	4Q	4Q Matt White

CHARACTERISTICS

Installation	**Concealed**
Required concealed parts	**ZA002450**

© 2021 Cisal. Via Pietro Durio 160 - 28010 - Alzo (NO) - Italia
Mail: cisal@cisal.it, Telefono: (+39) 0322 918111, P.Iva IT02422810032.