Cisal
TEL. (+39) 0322 918111
MAIL. cisal@cisal.it

# Exposed part for con.thermo.shower valve 1-outlet SMOOTH X32_X3007300

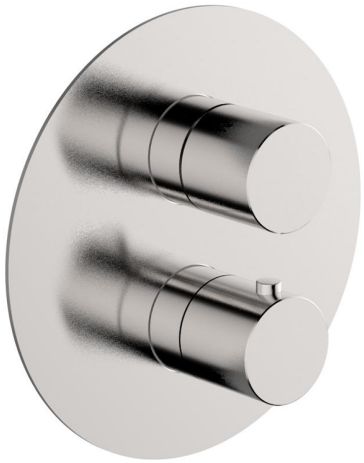

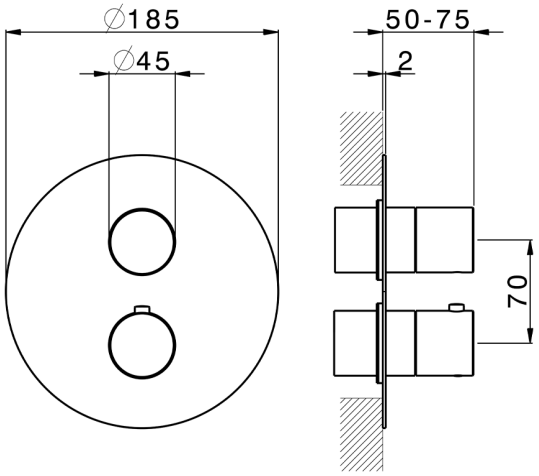


MODEL **X3007300**

Exposed part for con.thermo.shower valve 1-outlet,stop valve,without concealed part,for items ZA007301,with smooth handles - Inox AISI 316L

## AVAILABLE FINISHINGS

| | | |
|---|---|---|
|  | **5H** | 5H Dark Brass Brushed |
|  | **5L** | 5L Brushed Black Titanium |
|  | **5N** | 5N Brushed Rose Gold |
|  | **D1** | D1 Brushed Inox |

## CHARACTERISTICS

| | |
|---|---|
| Installation | **Concealed** |
| Required concealed parts | **ZA007301** |

### Thermostatic

The Cisal thermostatic is your personal water manager, helping you to handle, control and save water and energy.

© 2021 Cisal. Via Pietro Durio 160 - 28010 - Alzo (NO) - Italia
Mail: cisal@cisal.it, Telefono: (+39) 0322 918111, P.Iva IT02422810032.

Cisal
TEL. (+39) 0322 918111
MAIL. cisal@cisal.it

# Exposed part for con.thermo.shower valve 1-outlet SMOOTH X32_X3007300

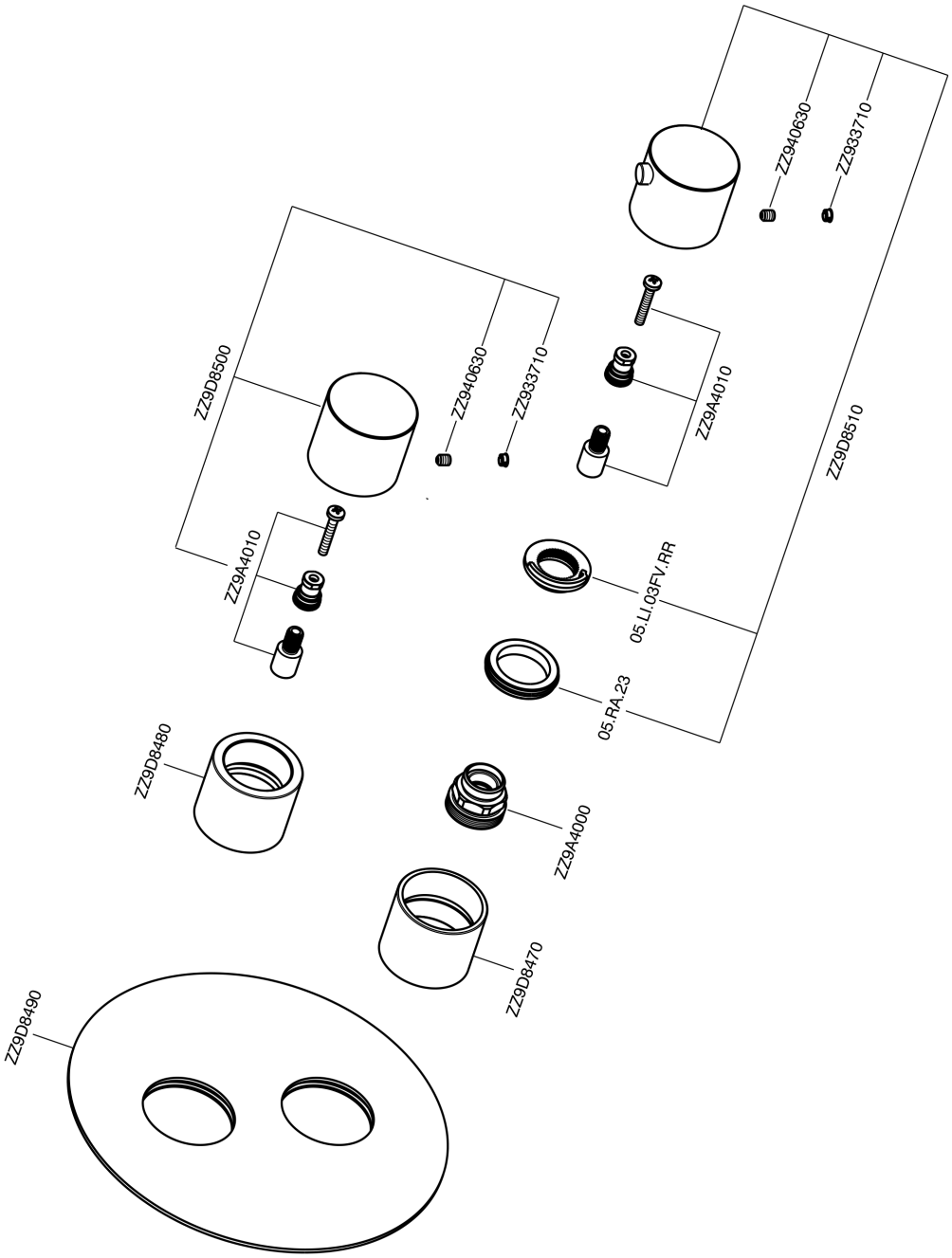


X3007300 https://en.cisal.it/exposed-part-for-con-thermo-shower-valve-1-outlet-smooth-x32-x3007300

© 2021 Cisal. Via Pietro Durio 160 - 28010 - Alzo (NO) - Italia
Mail: cisal@cisal.it, Telefono: (+39) 0322 918111, P.Iva IT02422810032.