Cisal
TEL. (+39) 0322 918111
MAIL. cisal@cisal.it

Concealed part single lever free-standing CONCEALED_ZA004510



MODEL **ZA004510**

Concealed part single lever free-standing

AVAILABLE FINISHINGS

04 04 Without finishing

CHARACTERISTICS

Concealed	**1**

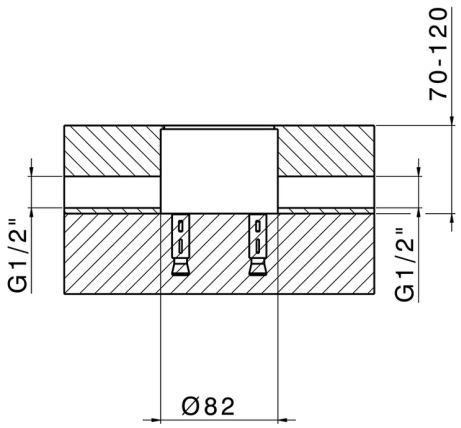

2026-11-20

© 2021 Cisal. Via Pietro Durio 160 - 28010 - Alzo (NO) - Italia
Mail: cisal@cisal.it, Telefono: (+39) 0322 918111, P.Iva IT02422810032.