Cisal
TEL. (+39) 0322 918111
MAIL. cisal@cisal.it

Exposed part for concealed S.L.bath-shower valve CUBIC_CU002300



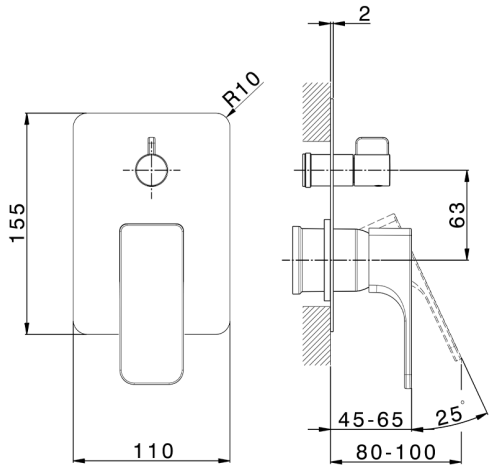

MODEL **CU002300**

Exposed part for concealed S.L.bath-shower valve,2-Way rotating diverter,without concealed part,for items Easy-Box ZA000230

AVAILABLE FINISHINGS

21 21 Chrome

2B 2B Polished Nickel

2F 2F Brushed Nickel

40 40 Matt Black

CHARACTERISTICS

Installation	**Concealed**
Required concealed parts	**ZA000230**

2026-02-11

© 2021 Cisal. Via Pietro Durio 160 - 28010 - Alzo (NO) - Italia
Mail: cisal@cisal.it, Telefono: (+39) 0322 918111, P.Iva IT02422810032.