Cisal
TEL. (+39) 0322 918111
MAIL. cisal@cisal.it

Exposed part for concealed S.L.bath-shower valve SLIM_SM002300



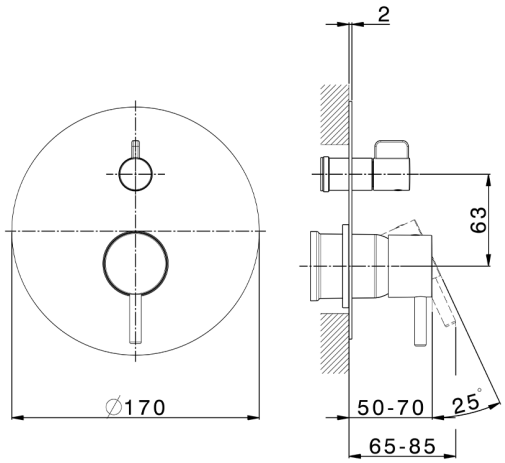

MODEL **SM002300**

Exposed part for concealed S.L.bath-shower valve,2-Way rotating diverter,without concealed part,for items ZA002230

AVAILABLE FINISHINGS

	21	21 Chrome
	2B	2B Polished Nickel
	40	40 Matt Black
	4Q	4Q Matt White

CHARACTERISTICS

Installation	**Concealed**
Required concealed parts	**ZA000230**

© 2021 Cisal. Via Pietro Durio 160 - 28010 - Alzo (NO) - Italia
Mail: cisal@cisal.it, Telefono: (+39) 0322 918111, P.Iva IT02422810032.