Cisal
TEL. (+39) 0322 918111
MAIL. cisal@cisal.it

Concealed single lever washbasin mixer Easy-Box CONCEALED_ZA002450C

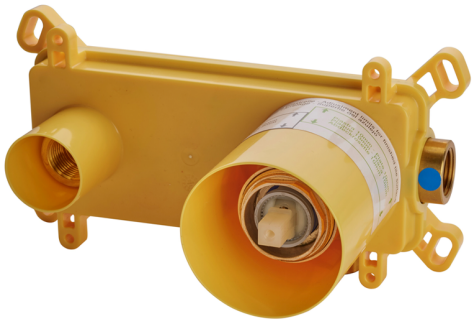

MODEL **ZA002450C**

Concealed single lever washbasin mixer
Easy-Box,with protection guard box,without trim kit

AVAILABLE FINISHINGS

04 04 Without finishing

CHARACTERISTICS

Concealed	**1**
Cartridge Spare Parts	**ZZ95409000**

35 mm Cartridge

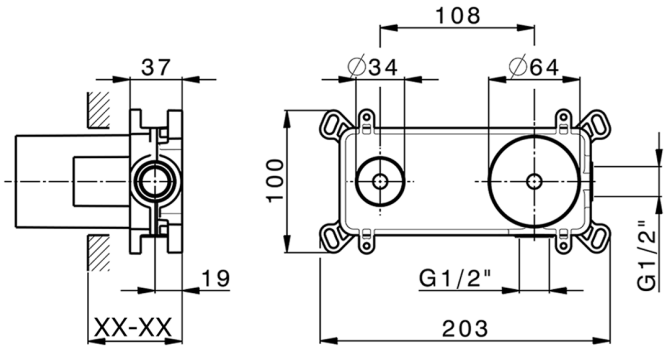

Piastra/Plate/Plaque/Platte/Placa
2-3mm: XX 56-76
10mm: XX 48-68

EcoStop

EcoStop feature limits water flow to approximately 50% of maximum output with one point of resistance on setting. Push slightly past the middle stop only when full water output is required. This will save water up to 50%.

© 2021 Cisal. Via Pietro Durio 160 - 28010 - Alzo (NO) - Italia
Mail: cisal@cisal.it, Telefono: (+39) 0322 918111, P.Iva IT02422810032.