Cisal
TEL. (+39) 0322 918111
MAIL. cisal@cisal.it

Exposed part for 1-outlet con.thermo.shower valve ARCANA AMERICA_AA007280

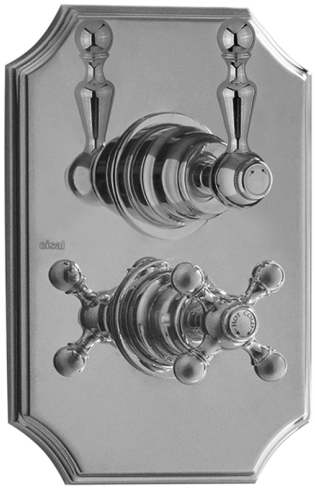

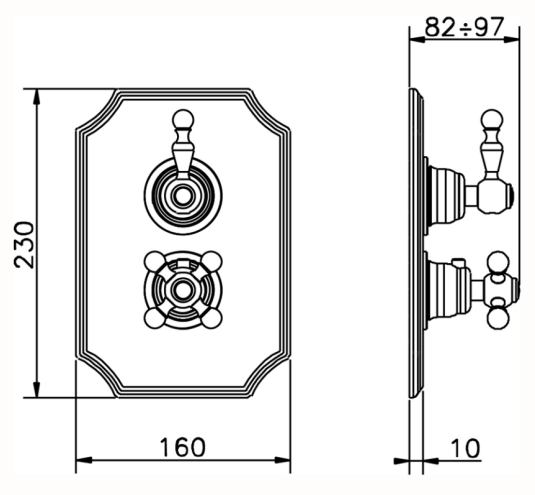

MODEL **AA007280**

Exposed part for 1-outlet con.thermo.shower valve,stopvalve,without concealed part,for items ZA007281

AVAILABLE FINISHINGS

21 21 Chrome

24 24 Gold

26 26 Old Copper

27 27 Old Bronze

2A 2A Satin Brushed Nickel

CHARACTERISTICS

Installation	**Concealed**
Required concealed parts	**ZA007281**

Thermostatic

The Cisal thermostatic is your personal water manager, helping you to handle, control and save water and energy.

© 2021 Cisal. Via Pietro Durio 160 - 28010 - Alzo (NO) - Italia
Mail: cisal@cisal.it, Telefono: (+39) 0322 918111, P.Iva IT02422810032.