Cisal
TEL. (+39) 0322 918111
MAIL. cisal@cisal.it

Single lever sink mixer with extrac.shower ARCANA ROYAL_AY002570

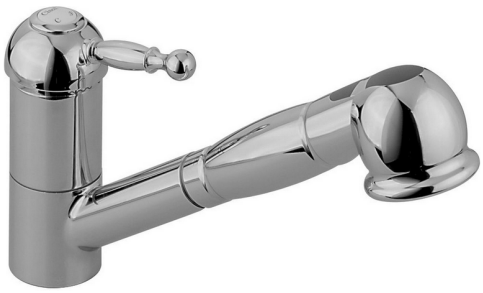

MODEL **AY002570**

Single lever sink mixer with extrac.shower,swivel spout,2 sprays handshower,150 cm Brass Flexible Hose

AVAILABLE FINISHINGS

21 21 Chrome

CHARACTERISTICS

Cartridge Spare Parts **ZZ92909000**

43 mm Cartridge

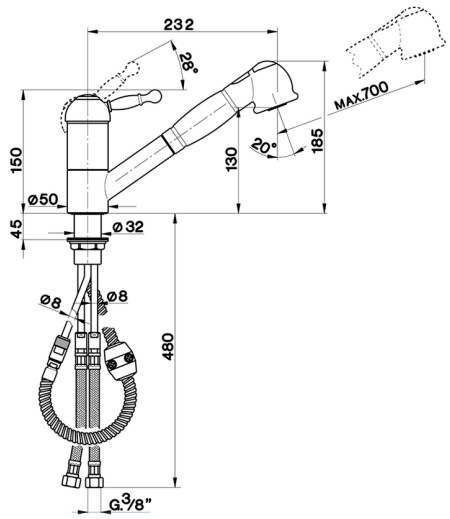

© 2021 Cisal. Via Pietro Durio 160 - 28010 - Alzo (NO) - Italia
Mail: cisal@cisal.it, Telefono: (+39) 0322 918111, P.Iva IT02422810032.