Cisal
TEL. (+39) 0322 918111
MAIL. cisal@cisal.it

Single lever washbasin mixer large EnergySave CUBIC_CU000495



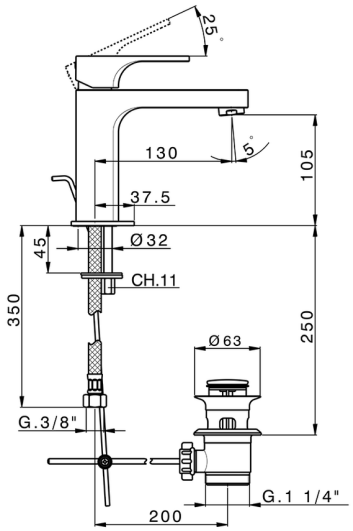

MODEL **CU000495**

Single lever washbasin mixer " large " EnergySave,with automatic 1"1/4 automatic pop-up waste,G.3/8" stainless steel flexible hoses

AVAILABLE FINISHINGS

21 21 Chrome

2B 2B Polished Nickel

2F 2F Brushed Nickel

40 40 Matt Black

CHARACTERISTICS

Cartridge Spare Parts **ZZ96691000**

25 mm Cartridge

EnergySave

Thanks to the EnergySave device, only cold water will be drawn if the lever is operated in the central position, so that the water heater will not be engaged and no hot water wasted, leading to considerable savings in energy and costs. The temperature can be adjusted by rotating the lever to the left, until the desired temperature is reached.

2026-02-13

© 2021 Cisal. Via Pietro Durio 160 - 28010 - Alzo (NO) - Italia
Mail: cisal@cisal.it, Telefono: (+39) 0322 918111, P.Iva IT02422810032.