Cisal
TEL. (+39) 0322 918111
MAIL. cisal@cisal.it

Bidet mixer ARCANA AMERICA_AA000550



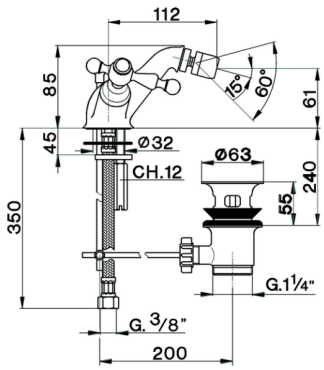

MODEL **AA000550**

Bidet mixer,with automatic 1"1/4 automatic pop-up waste,G.3/8" stainless steel flexible hoses

AVAILABLE FINISHINGS

21 21 Chrome

24 24 Gold

26 26 Old Copper

27 27 Old Bronze

2A 2A Satin Brushed Nickel

74 74 Chrome/Gold

CHARACTERISTICS

© 2021 Cisal. Via Pietro Durio 160 - 28010 - Alzo (NO) - Italia
Mail: cisal@cisal.it, Telefono: (+39) 0322 918111, P.Iva IT02422810032.