Cisal
TEL. (+39) 0322 918111
MAIL. cisal@cisal.it

Exposed part for concealed S.L.bath-shower valve ARCANA EMPRESS_EM002100



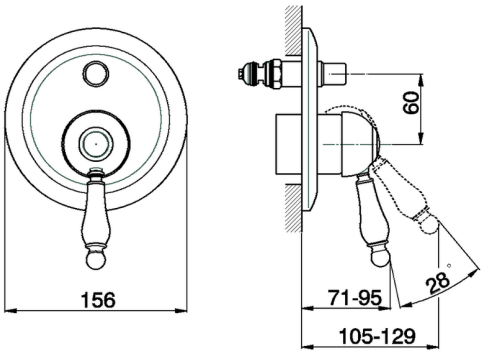

MODEL **EM002100**

Exposed part for concealed S.L.bath-shower valve,2 outlet automatic diverter,without concealed part,for item ZA002210

AVAILABLE FINISHINGS

	21	21 Chrome
	24	24 Gold
	26	26 Old Copper
	27	27 Old Bronze
	2A	2A Satin Brushed Nickel
	74	74 Chrome/Gold

CHARACTERISTICS

Installation	**Concealed**
Required concealed parts	**ZA002210**

© 2021 Cisal. Via Pietro Durio 160 - 28010 - Alzo (NO) - Italia
Mail: cisal@cisal.it, Telefono: (+39) 0322 918111, P.Iva IT02422810032.